# 25-lb A.S.C.E. specifications

Scale: Drawing is actual size

LBFoster Rail Products

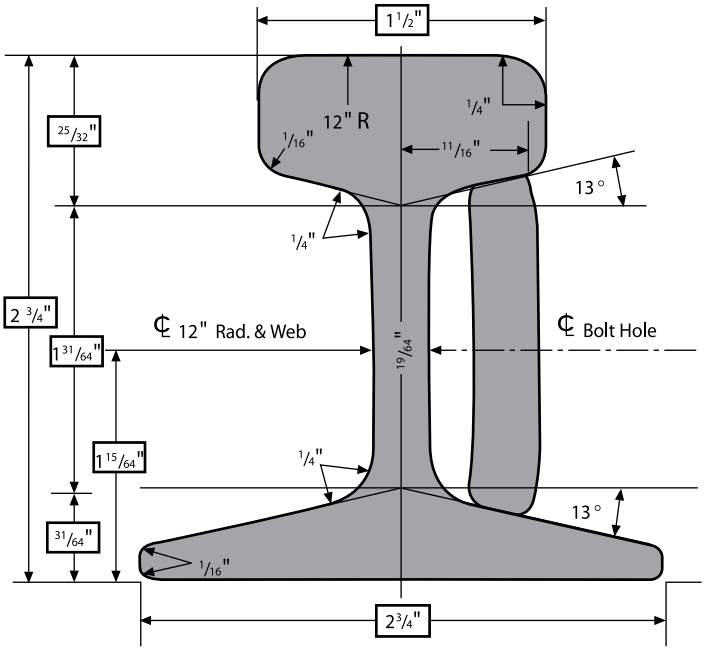


## SPLICE BAR

16-1/8" length, 5.5 lbs. per pair. 1/2" x 2-1/2" button head, oval neck track bolt with heavy square nut.

| | 30 FT | 40 FT |
|---|---|---|
| LBS/FT (Nominal) | 2.14 | 2.14 |
| Pairs | | |
| Net Ton | 8.0 | 6.0 |
| Mile of Track | 352.0 | 264.0 |

## RAIL (30 FT,40 FT)

| | |
|---|---|
| Area In $^2$ | 2.40 |
| Sec. Modulus In $^3$ Head | 1.76 |
| Mom. Inertia In $^4$ | 2.50 |
| Lbs/Yd (Nominal) | 25.0 |
| Track Feet/Net Ton | 120.0 |
| Net Tons/Track Mile | 44.0 |