CASTING TOLERANCES: (WHERE APPLICABLE)
OVERALL LENGTH OR WIDTH 10 FT OR UNDER = ±1/8" 10 TO 20 FT = ±1/8", -3/16" 20 TO 40 FT = ±1/4"
TOTAL THICKNESS = -1/8", +1/4"
VARIATION FROM SQUARE = ±1/8" PER 6 FT OF DIAGONAL
LOCAL SMOOTHNESS = 1/4" IN 10 FT
SWEEP = ±1/4"
POSITION OF TENDONS = ±1/4"
POSITION OF BLOCKOUTS = ±1/4"
SIZE OF BLOCKOUTS = ±1/4"
POSITION OF EMBEDS = ±1/4"
TIPPING & FLUSHNESS OF PLATES = +1/16", -1/4"
LIFTING = ±1/2"
END SQUARENESS = ±1/8"

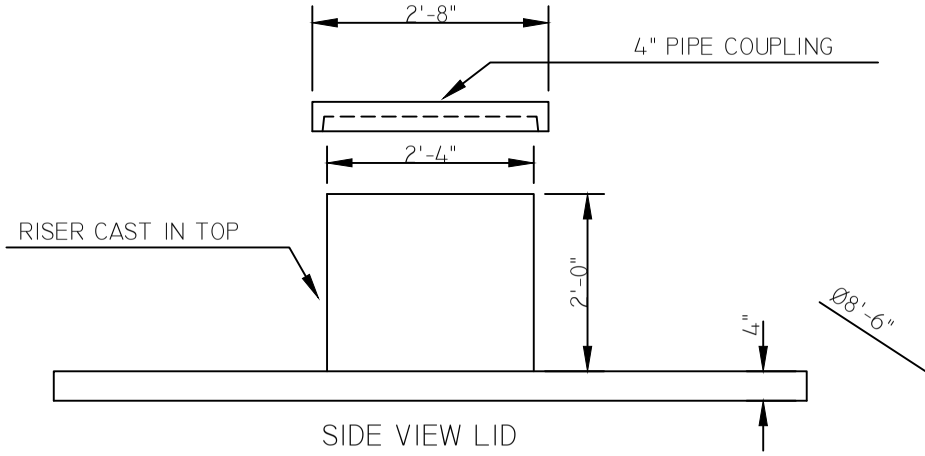

SIDE VIEW LID

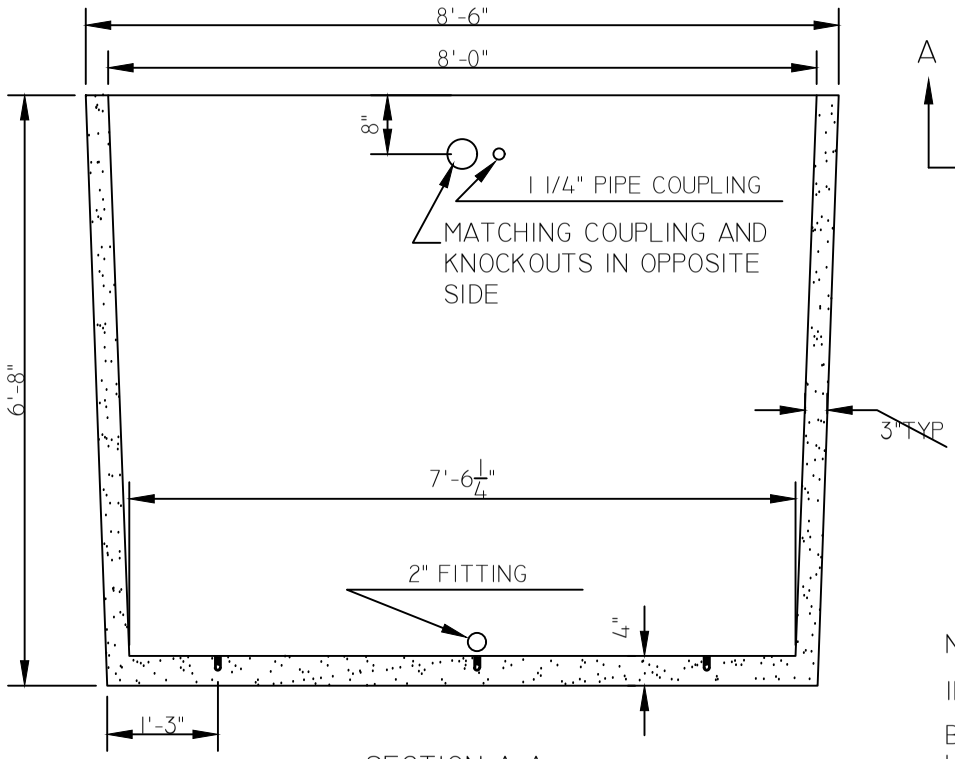

SECTION A-A

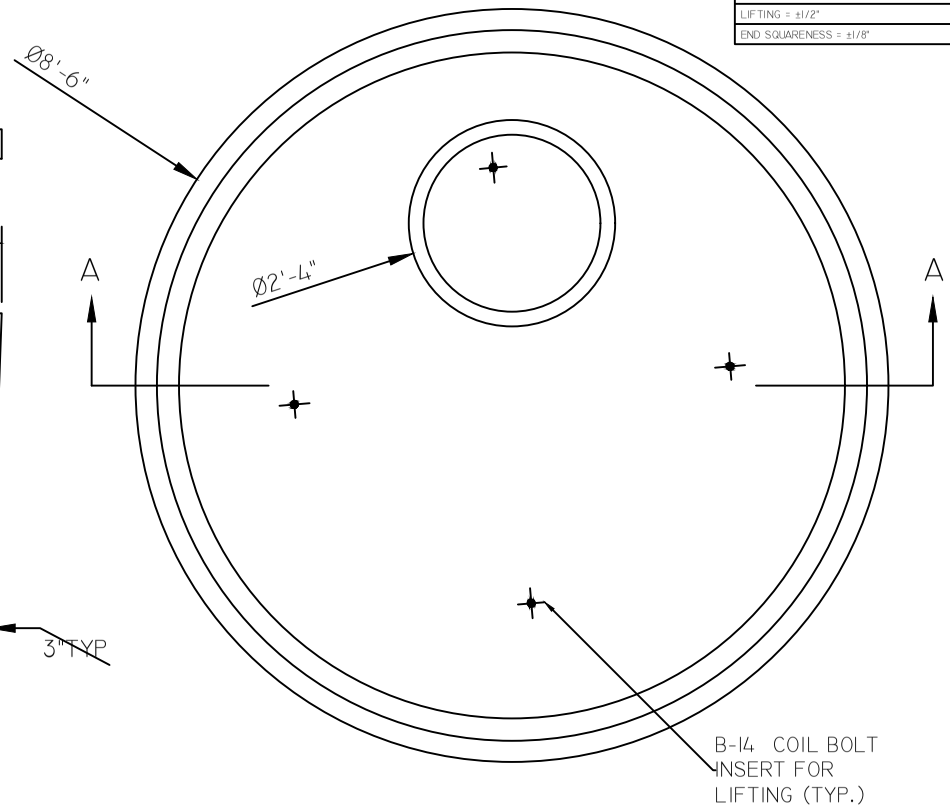

TOP VIEW

NOTE:

INSTALL MINIMUM 4" SAND OR PEA GRAVEL UNDER TANK

B-14 LIFTING TO BE 15 1/2" OFF OUTSIDE WALL TO CENTER OF LIFTER, LOCATED AT QUARTER POINTS OF THE BASE DIAMETER.

PART #:	CMTKCT2203
WEIGHT	#11,375
CU YD.	2.81

BILL OF MATERIAL

REQ'D	MATERIAL	LNGTH

1-800-837-8918

CXT® PRECAST CONCRETE PRODUCTS
TELEPHONE (304) 464-4441
P.O. BOX 265
WAVERLY, WV 26184-0265

2200 GALLON CISTERN
CUSTOMER
PROJECT NAME
PROJECT LOCATION

CHECKED BY: HMC | CHECKED DATE: 01/29/2019 | DRAWN BY BLK | DATE 7/21/16

DWG.NO. 1 OF 4

REV	DESCRIPTION	DATE
6		6
5		5
4		4
3		3
2	ADDED TOLERANCES & PART #	1/29/19
1	UPDATED HEIGHT OF TANK & RISER	10/19/17