135-lb CRANE RAIL specifications

Scale: Drawing is actual size

LBFoster
Rail Products

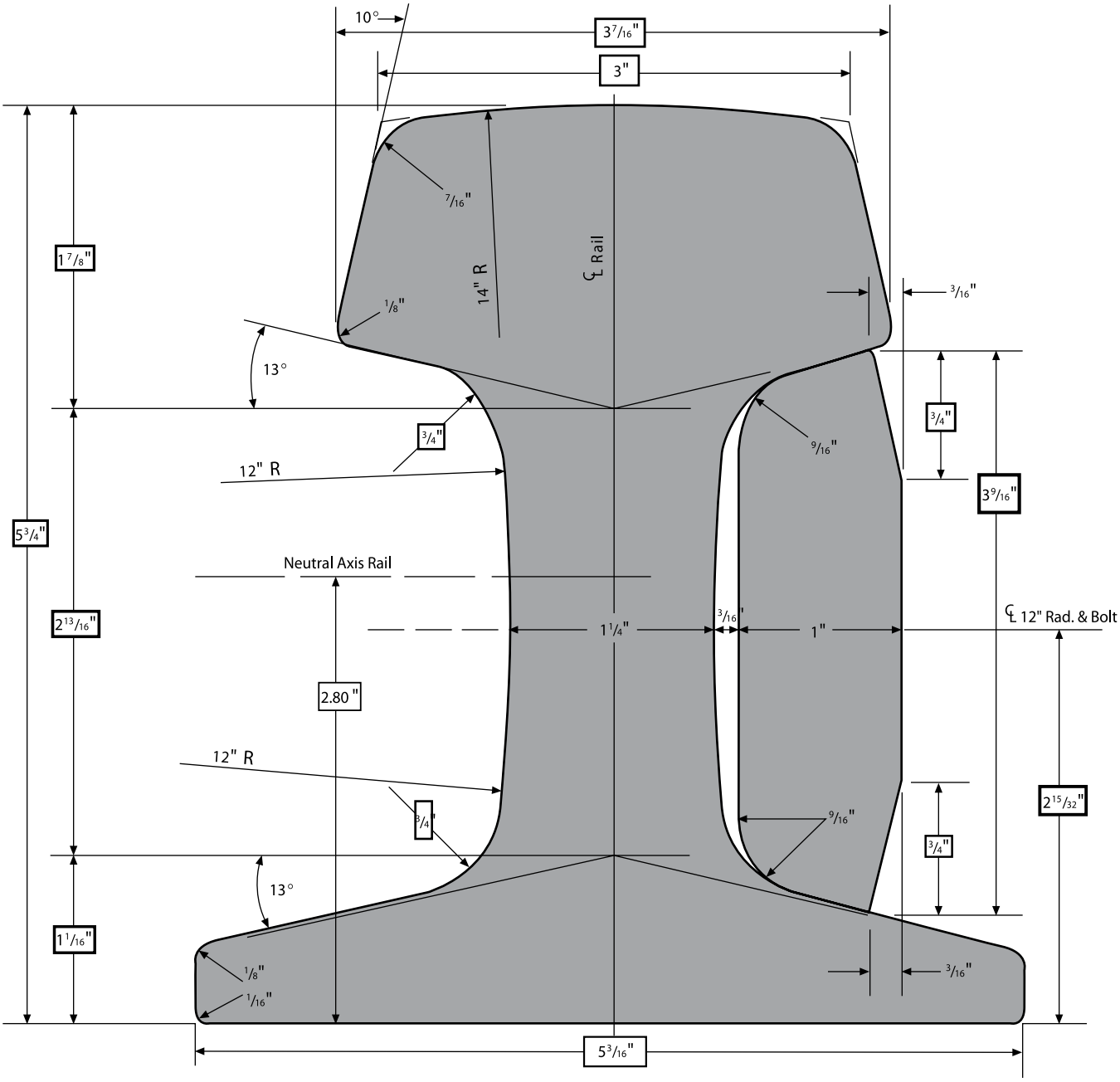

SPLICE BAR

34" length, 62 lbs. per pair. Hex Head Bolts 1-1/8" x 5-1/2" and Heavy Hex Nuts — Heat Treated

Area In ^{2}	3.19
Lbs/Ft	10.85
Lbs/Bar	28.9

RAIL (39 FT, 60 FT, 78 FT)

Area In ^{2}		13.32
Sec. Modulus In ^{3}	Head	17.20
	Base	18.02
Mom. Inertia In ^{4}		50.59
Lbs/Yd (Nominal)		135.0